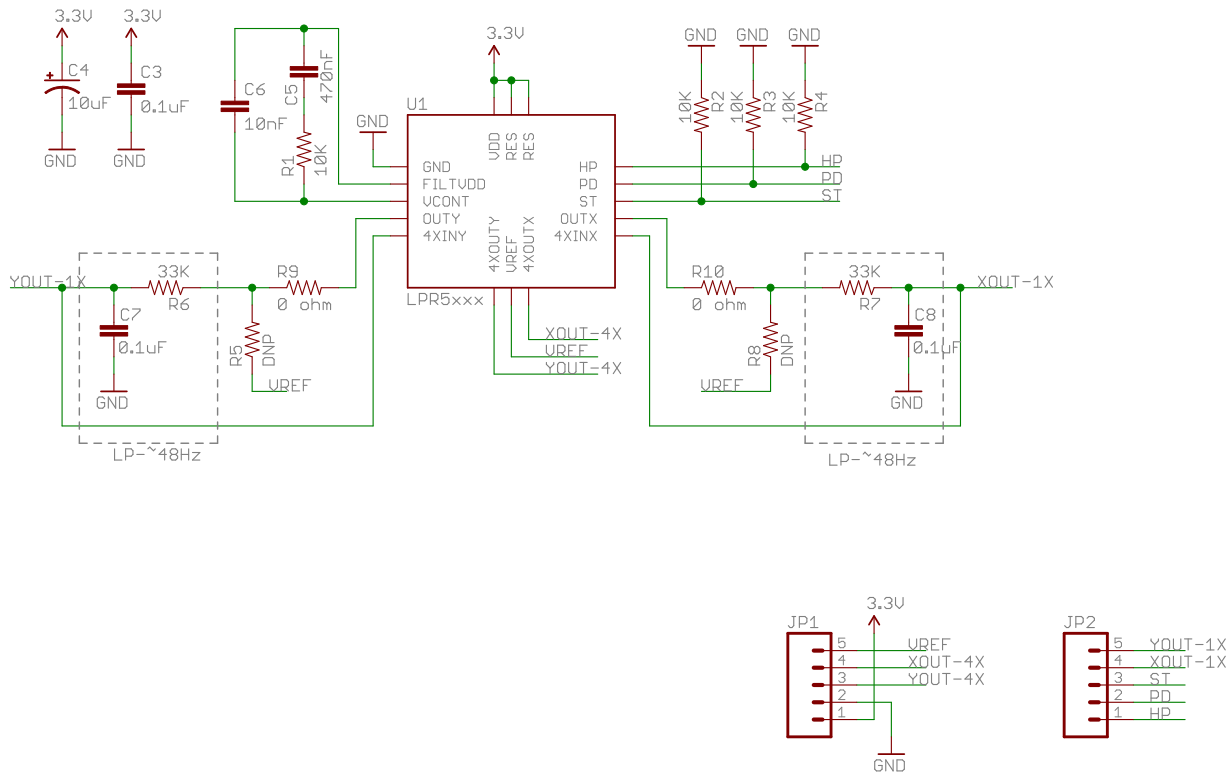

TITLE: ST-DualGyro-PR-Breakout-v11	SFE
Document Number:	REV:
Date: 15/06/2010 7:49:12	Sheet: 1/1