REVISION BLOCK			
REV :	DESCRIPTION - ECO	APPROVED BY :	DATE :
A	Initial Release	G.Gonzalez	05/15/13

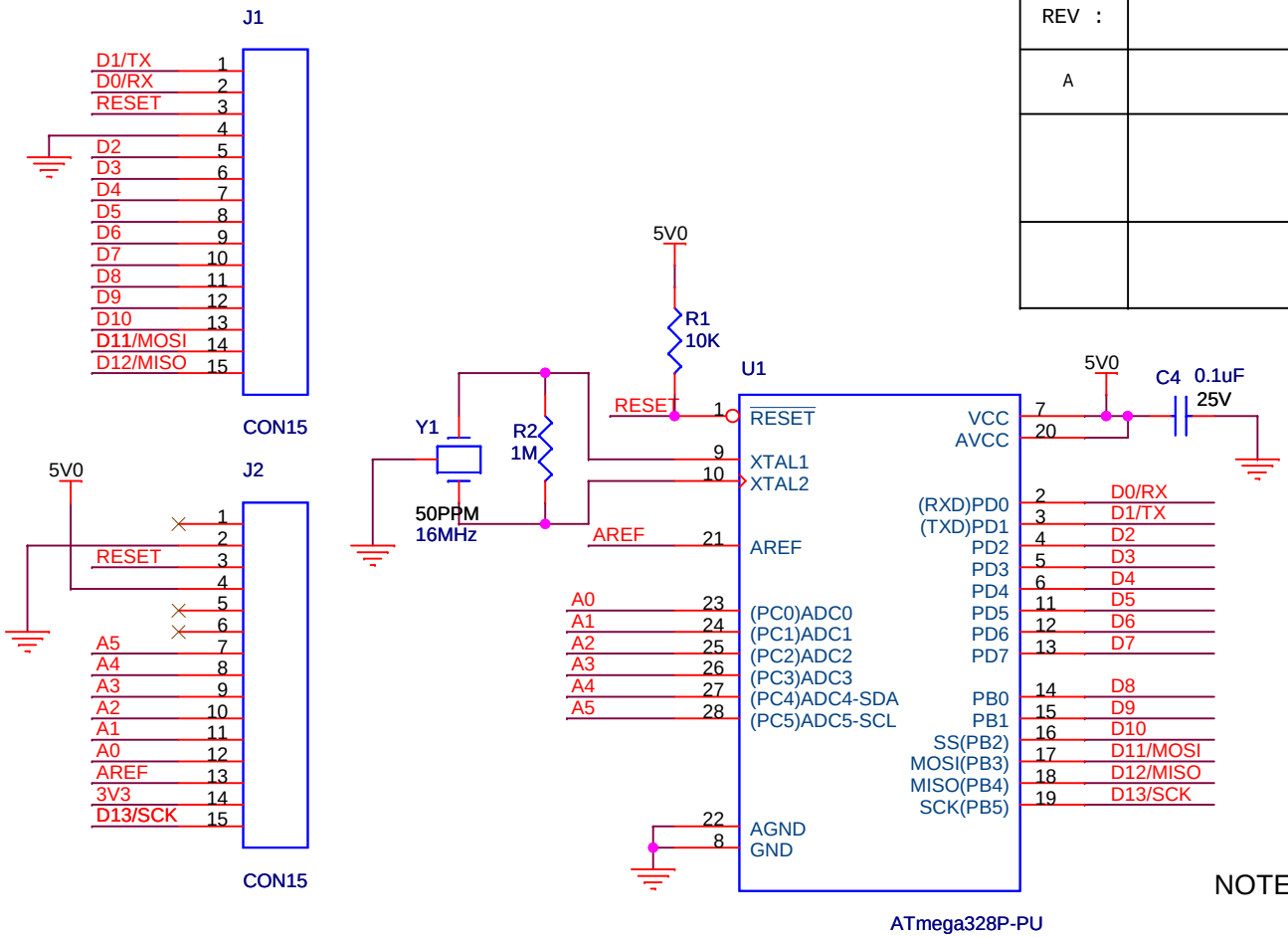

PROGRAMMING PORT

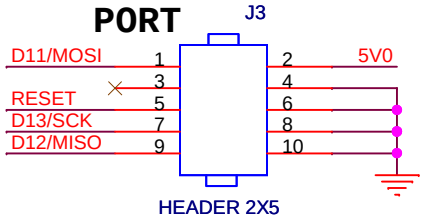

CONNECT TO PROGRAMMER
USBASP V2.0

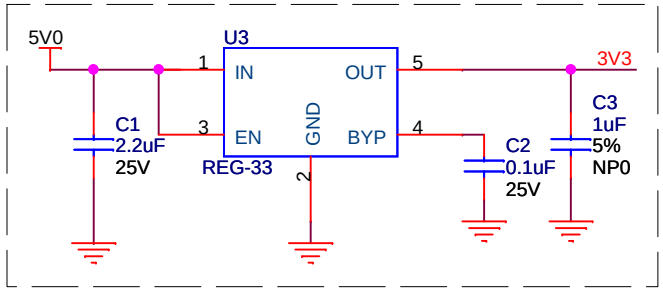

(1)

NOTES:

1. The 3.3V PS is optional and DNI, install only in selected units, this may create a different ASSY and BOM number.

Title	STAND ALONE ARDUINO ATMEGA328P-Pu Designed by GGonzalez	
Size A	Document Number 20-0012-01	Rev NC
Date: Wednesday, May 15, 2013	Sheet 1 of 1	